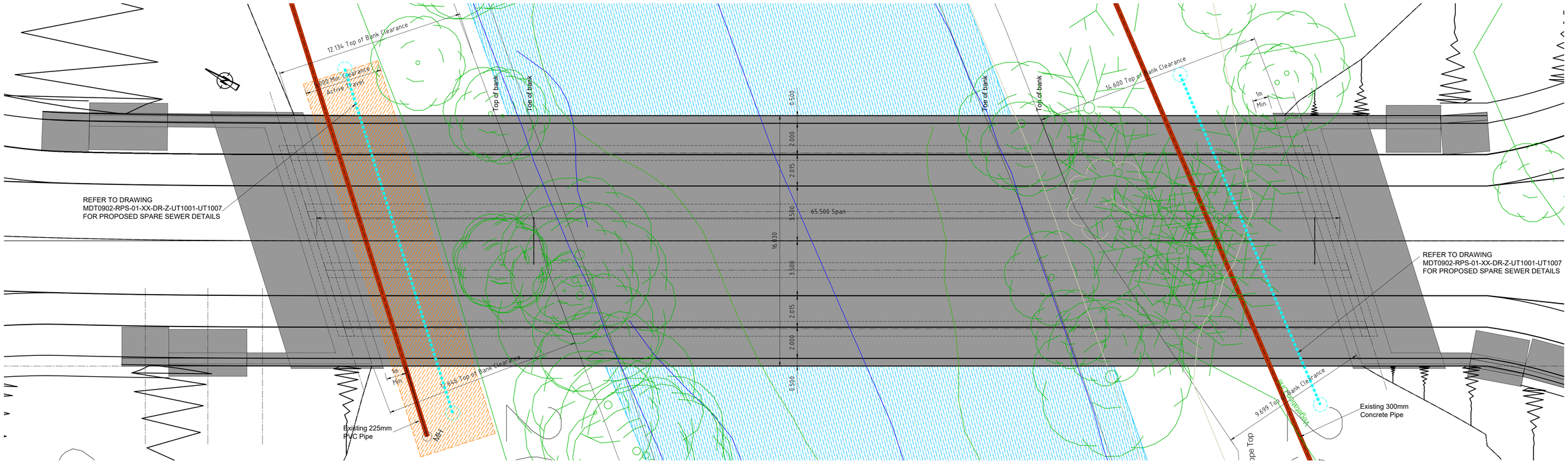

PLAN LAYOUT

(Scale 1 : 125)

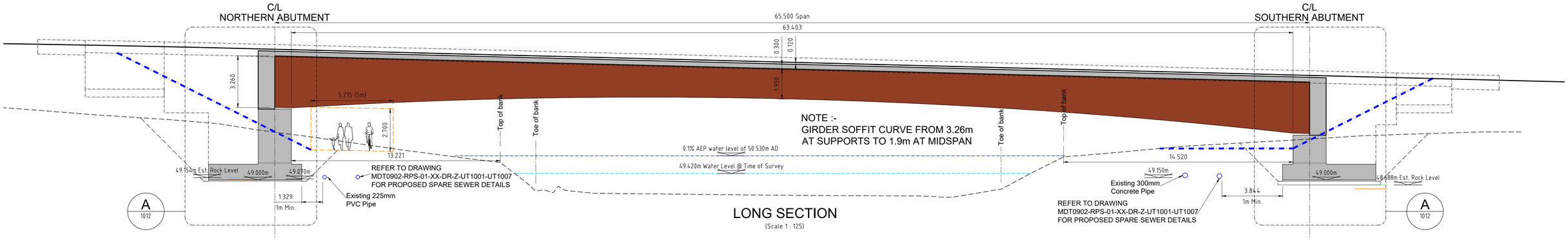

LONG SECTION

(Scale 1 : 125)

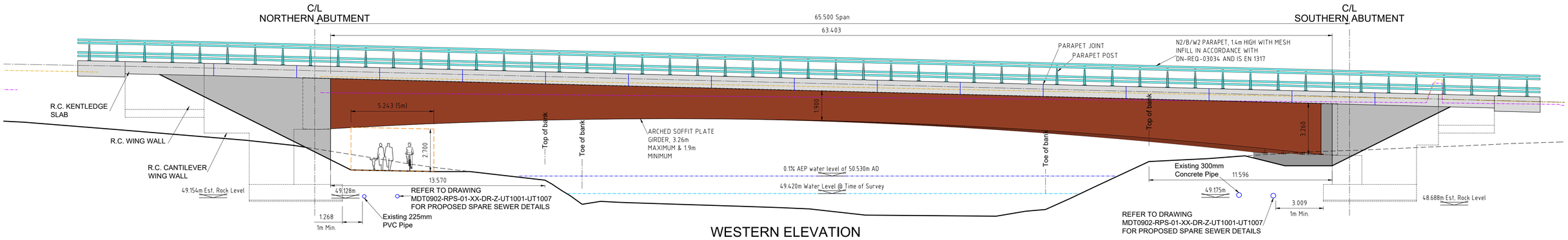

WESTERN ELEVATION

(Scale 1 : 50)

R:\MDT0902 - Celbridge to Hazelhatch Link Road\8.0 Drawings\Br\MDT0902-RPS-01-XX-DR-Z-BR1010-BR1012.dwg

Client

Key Plan

General Notes

(i) Hard copies, dwf and pdf will form a controlled issue of the drawing. All other formats (dwg etc.) are deemed to be an uncontrolled issue and any work carried out based on these files is at the recipients own risk. RPS will not accept any responsibility for any errors from the use of these files, either by human error by the recipient, listing of the un-dimensioned measurements, compatibility with the recipients software, and any errors arising when these files are used to aid the recipients drawing production, or setting out on site.

(ii) DO NOT SCALE, use figured dimensions only.

(iii) This drawing is the property of RPS, it is a project confidential classified document. It must not be copied used or its contents divulged without prior written consent. The needs and expectations of client and RPS must be considered when working with this drawing.

(iv) Information including topographical survey, geotechnical investigation and utility detail used in the design have been provided by others.

(v) All Levels refer to Ordnance Survey Datum, Malin Head.

Rev	Date	Drn / Chk	Amendment / Issue	App
C01	29/10/25	PD / TD	FOR PLANNING APPROVAL	SF

West Pier
Business Campus
Dun Laoghaire
Co Dublin

T +353 1 4882900
F +353 1 2835676
W www.rpsgroup.com/ireland
E ireland@rpsgroup.com

File Identifier

Scale
As Shown @ A1
Half @ A3

Created on
15/11/2024

Sheets
1 of 3

Project
CELBRIDGE HAZELHATCH MOBILITY CORRIDOR

Title
RIVER LIFFEY CROSSING
General Arrangement
(Sheet 1 of 3)

Drawing Number	Status	Rev
MDT0902-RPS-01-XX-DR-Z-BR1010	A1	C01

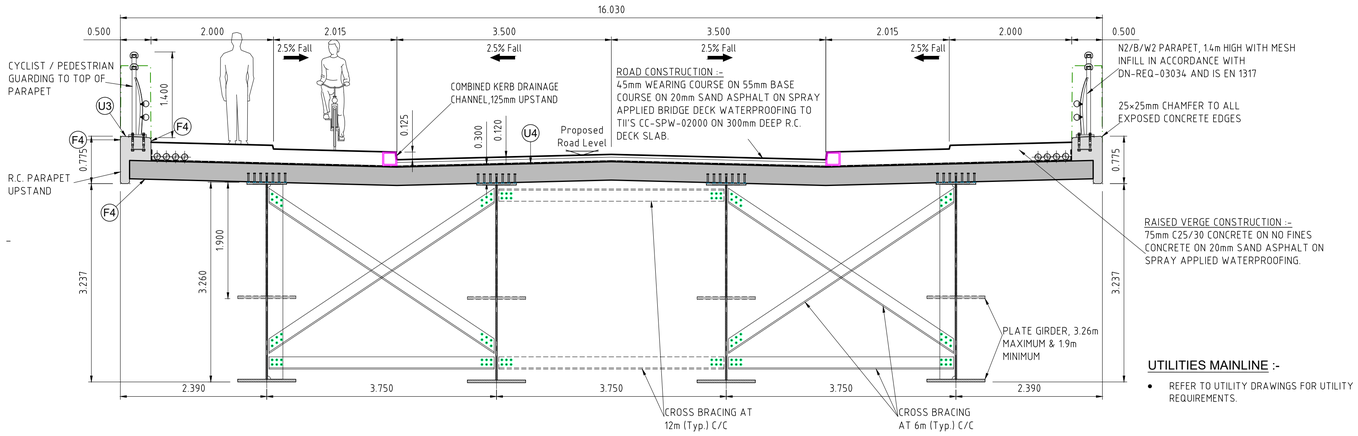

TYPICAL DECK CROSS SECTION

(Scale 1 : 50)

UTILITIES MAINLINE :-

- REFER TO UTILITY DRAWINGS FOR UTILITY REQUIREMENTS.

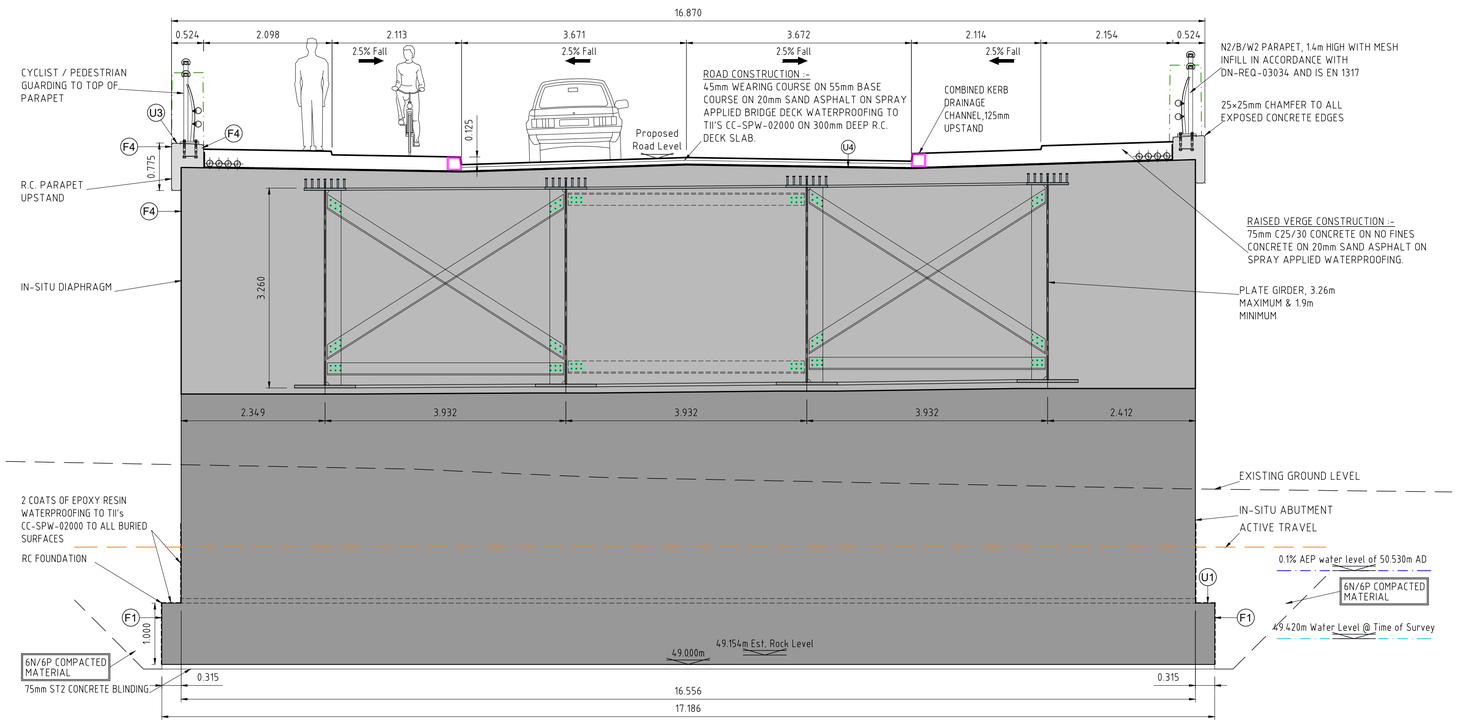

TYPICAL ABUTMENT SECTION

(Scale 1 : 50)

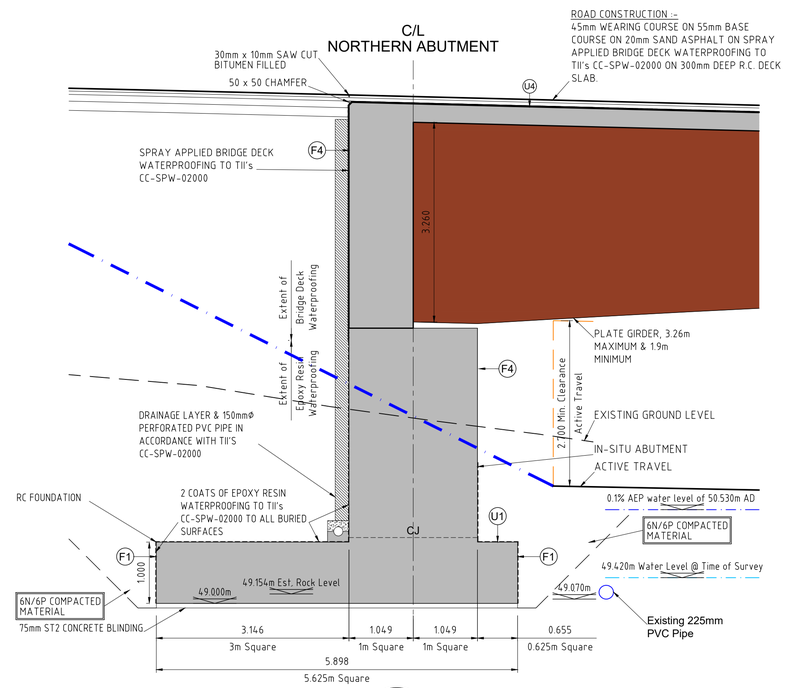

DETAIL A

1010

(Scale 1 : 50)

R:\MDT0902 - Celbridge to Hazelhatch Link Road\8.0 Drawings\Br\MDT0902-RPS-01-XX-DR-Z-BR1010-BR1012.dwg

Client

Key Plan

General Notes

(i) Hard copies, dwf and pdf will form a controlled issue of the drawing. All other formats (dwg etc.) are deemed to be an uncontrolled issue and any work carried out based on these files is at the recipients own risk. RPS will not accept any responsibility for any errors from the use of these files, either by human error by the recipient, listing of the un-dimensioned measurements, compatibility with the recipients software, and any errors arising when these files are used to aid the recipients drawing production, or setting out on site.

(ii) DO NOT SCALE, use figured dimensions only.

(iii) This drawing is the property of RPS, it is a project confidential classified document. It must not be copied used or its contents divulged without prior written consent. The needs and expectations of client and RPS must be considered when working with this drawing.

(iv) Information including topographical survey, geotechnical investigation and utility detail used in the design have been provided by others.

(v) All Levels refer to Ordnance Survey Datum, Malin Head.

Rev	Date	Drn / Chk	Amendment / Issue	App
C01	29/10/25	PD / TD	FOR PLANNING APPROVAL	SF

West Pier
Business Campus
Dun Laoghaire
Co Dublin

T +353 1 4882900
F +353 1 2835676
W www.rpsgroup.com/ireland
E ireland@rpsgroup.com

File Identifier

Scale: As Shown @ A1, Half @ A3

Created on: 15/11/2024

Sheets: 2 of 3

Project: CELBRIDGE HAZELHATCH MOBILITY CORRIDOR

Title: RIVER LIFFEY CROSSING General Arrangement (Sheet 2 of 3)

Drawing Number	Status	Rev
MDT0902-RPS-01-XX-DR-Z-BR1011	A1	C01

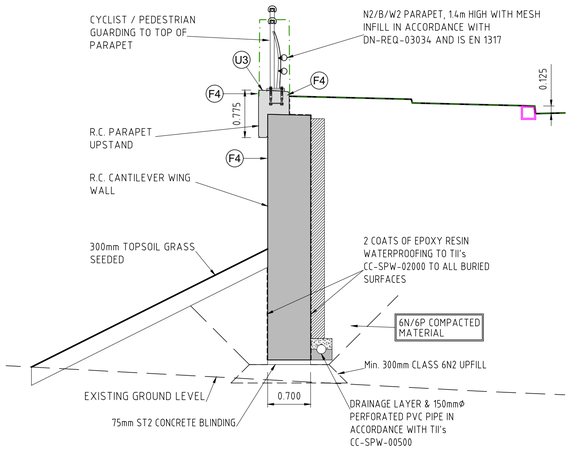

TYPICAL CANTILEVER WING WALL

(Scale 1 : 50)

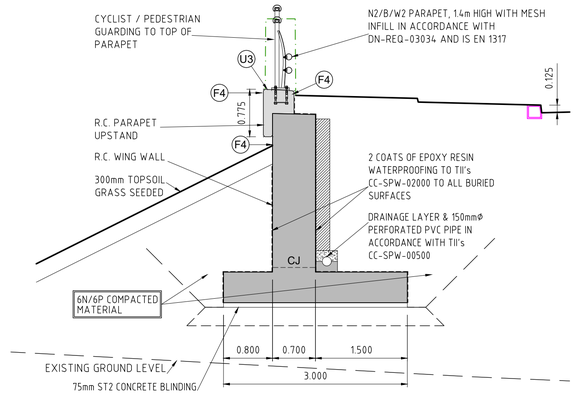

TYPICAL WING WALL

(Scale 1 : 50)

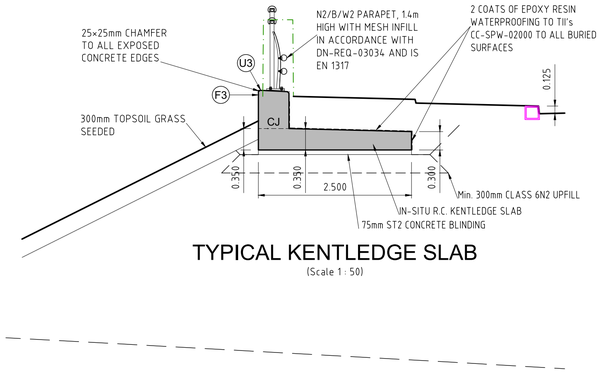

TYPICAL KENTLEDGE SLAB

(Scale 1 : 50)

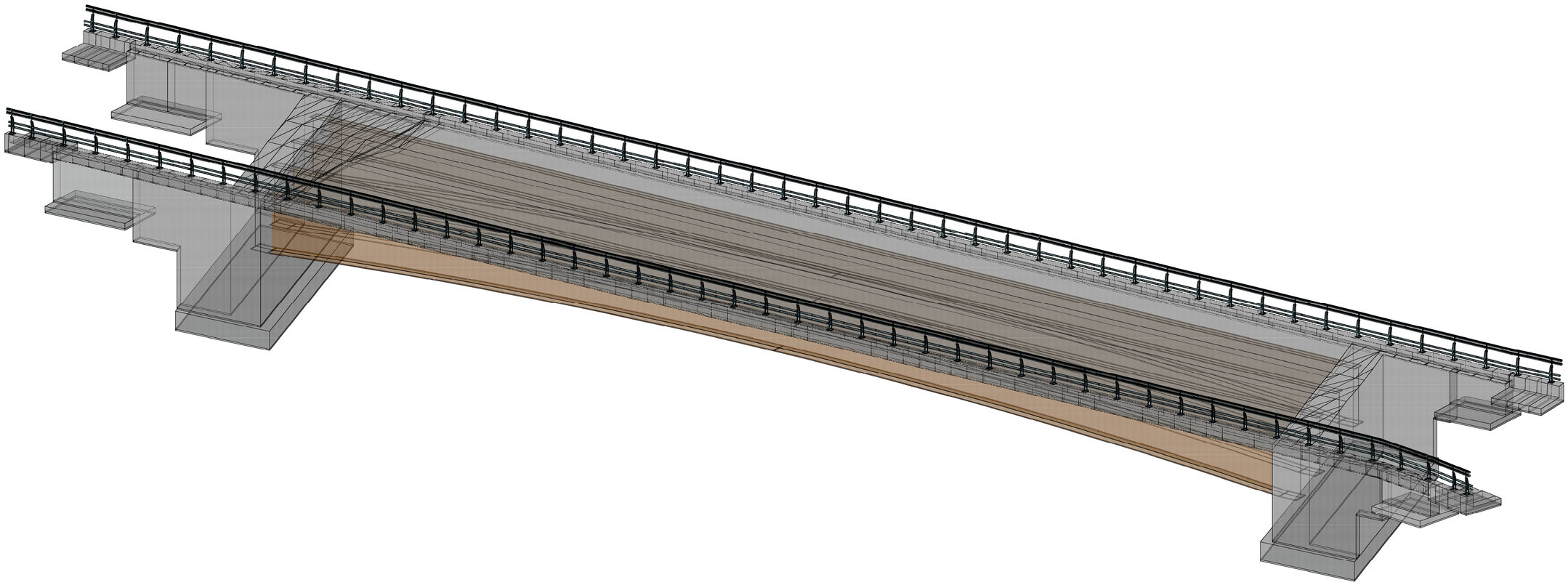

3D VIEW

(N.T.S.)

Client

Key Plan

General Notes

(i) Hard copies, dwf and pdf will form a controlled issue of the drawing. All other formats (dwg etc.) are deemed to be an uncontrolled issue and any work carried out based on these files is at the recipients own risk. RPS will not accept any responsibility for any errors from the use of these files, either by human error by the recipient, listing of the un-dimensioned measurements, compatibility with the recipients software, and any errors arising when these files are used to aid the recipients drawing production, or setting out on site.

(ii) DO NOT SCALE, use figured dimensions only.

(iii) This drawing is the property of RPS, it is a project confidential classified document. It must not be copied used or its contents divulged without prior written consent. The needs and expectations of client and RPS must be considered when working with this drawing.

(iv) Information including topographical survey, geotechnical investigation and utility detail used in the design have been provided by others.

(v) All Levels refer to Ordnance Survey Datum, Malin Head.

Rev	Date	Drn	Chk	Amendment / Issue	App
C01	29/10/25	PD	TD	FOR PLANNING APPROVAL	SF

West Pier
Business Campus
Dun Laoghaire
Co Dublin

T +353 1 4882900
F +353 1 2835676
W www.rpsgroup.com/ireland
E ireland@rpsgroup.com

File Identifier

Scale: As Shown @ A1, Half @ A3

Created on: 15/11/2024

Sheets: 3 of 3

Project: CELBRIDGE HAZELHATCH MOBILITY CORRIDOR

Title: RIVER LIFFEY CROSSING
General Arrangement
(Sheet 3 of 3)

Drawing Number	Status	Rev
MDT0902-RPS-01-XX-DR-Z-BR1012	A1	C01

R:\MDT0902 - Celbridge to Hazelhatch Link Road\8.0 Drawings\Br\MDT0902-RPS-01-XX-DR-Z-BR1010-BR1012.dwg